PA 500 SF 45 A

Swage fitting, SFL angle 45°

HANSA-FLEX

Properties

Application	Swage fitting for HD 500 hoses
Connection 1	SAE flange connection 3000 PSI
Sealing form 1	flat seal with SF O-ring
Short code	SFL
Standard	SAE J518 ISO 6162-1
Integration	with pull-out protection (interlock)
Scope of supply	Swage nipple + swage ferrule
Material	Steel
Surface	electro galvanised



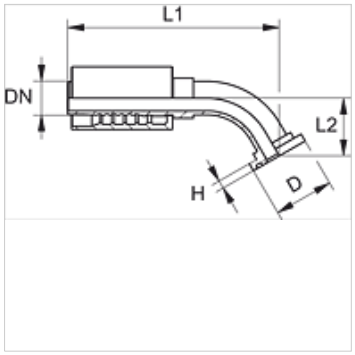

Item

Identification	DN	Size	Inches	Flange size	D (mm)	H (mm)	L1 (mm)	L2 (mm)
PA 720 SF 45	19	12	3/4"	3/4"	38,1	6,8	132,5	27,5
PA 720 SF 25 45	19	12	3/4"	1"	44,5	8,1	134,5	29,5
PA 725 SF 20 45	25	16	1"	3/4"	38,1	6,8	153,0	30,0
PA 725 SF 45	25	16	1"	1"	44,5	8,1	159,0	28,5
PA 725 SF 32 45	25	16	1"	1.1/4"	50,8	8,1	161,0	30,5
PA 532 SF 25 45 A	31	20	1.1/4"	1"	44,5	8,0	170,5	35,0
PA 532 SF 45 A	31	20	1.1/4"	1.1/4"	50,8	8,0	182,0	34,5
PA 532 SF 40 45 A	31	20	1.1/4"	1.1/2"	60,3	8,0	187,0	37,5
PA 540 SF 32 45 A	38	24	1.1/2"	1.1/4"	50,8	8,0	202,5	43,0
PA 540 SF 45 A	38	24	1.1/2"	1.1/2"	60,3	8,0	215,0	41,5
PA 540 SF 50 45 A	38	24	1.1/2"	2"	71,4	9,5	230,5	55,5
PA 550 SF 45 A	51	32	2"	2"	71,4	9,5	263,0	58,5

Product versions

PA 500 SF 45 VA	Swage fitting, SFL angle 45°, Stainless steel

Despite careful checking, we cannot guarantee the accuracy of all information included on this site, and we accept no liability.