PA 500 SF6 45 A

Swage fitting, SFS angle 45°

HANSA-FLEX

Properties

Application	Swage fitting for HD 500 hoses
Connection 1	SAE flange connection 6000 PSI
Sealing form 1	flat seal with SF O-ring
Short code	SFS
Standard	SAE J518 ISO 6162-2
Integration	with pull-out protection (interlock)
Scope of supply	Swage nipple + swage ferrule
Material	Steel
Surface	electro galvanised



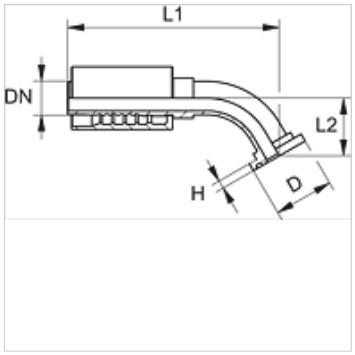

Item

Identification	DN	Size	Inches	Flange size	D (mm)	H (mm)	L1 (mm)	L2 (mm)
PA 720 SF6 45	19	12	3/4"	3/4"	41,3	8,8	135,5	30,0
PA 720 SF6 25 45	19	12	3/4"	1"	47,6	9,6	139,5	34,5
PA 725 SF6 45	25	16	1"	1"	47,6	9,6	164,0	33,5
PA 725 SF6 32 45	25	16	1"	1.1/4"	54,0	10,4	169,0	38,5
PA 532 SF6 25 45 A	31	20	1.1/4"	1"	47,6	9,5	-	-
PA 532 SF6 45 A	31	20	1.1/4"	1.1/4"	54,0	10,3	191,0	41,5
PA 532 SF6 40 45 A	31	20	1.1/4"	1.1/2"	63,5	12,6	197,0	47,5
PA 540 SF6 45 A	38	24	1.1/2"	1.1/2"	63,5	12,6	222,5	49,0
PA 540 SF6 32 45 A	38	24	1.1/2"	1.1/4"	54,0	10,3	-	-
PA 540 SF6 50 45 A	38	24	1.1/2"	2"	79,4	12,6	236,0	61,0
PA 550 SF6 45 A	51	32	2"	2"	79,4	12,6	275,0	64,5

Product versions

PA 500 SF6 45 VA	Swage fitting, SFS angle 45°, Stainless steel

Despite careful checking, we cannot guarantee the accuracy of all information included on this site, and we accept no liability.