PA 500 SF6 90 A

Swage fitting, SFS angle 90°

Properties

Application	Swage fitting for HD 500 hoses
Connection 1	SAE flange connection 6000 PSI
Sealing form 1	flat seal with SF O-ring
Short code	SFS
Standard	SAE J518 ISO 6162-2
Integration	with pull-out protection (interlock)
Scope of supply	Swage nipple + swage ferrule
Material	Steel
Surface	electro galvanised



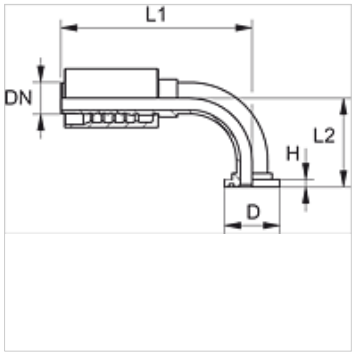

Item

Identification	DN	Size	Inches	Flange size	D (mm)	H (mm)	L1 (mm)	L2 (mm)
PA 720 SF6 90	19	12	3/4"	3/4"	41,3	8,8	127,5	62,0
PA 720 SF6 25 90	19	12	3/4"	1"	47,6	9,6	127,5	68,0
PA 725 SF6 20 90	25	16	1"	3/4"	41,3	8,8	152,5	70,5
PA 725 SF6 90	25	16	1"	1"	47,6	9,6	158,0	74,0
PA 532 SF6 25 90 A	31	20	1.1/4"	1"	47,6	9,5	162,0	80,0
PA 532 SF6 90 A	31	20	1.1/4"	1.1/4"	54,0	10,3	182,0	92,7
PA 532 SF6 40 90 A	31	20	1.1/4"	1.1/2"	63,5	12,6	182,0	101,2
PA 540 SF6 32 90 A	38	24	1.1/2"	1.1/4"	54,0	10,3	193,0	100,0
PA 540 SF6 90 A	38	24	1.1/2"	1.1/2"	63,5	12,6	215,5	110,0
PA 540 SF6 50 90 A	38	24	1.1/2"	2"	79,4	12,6	215,5	126,0
PA 550 SF6 90 A	51	32	2"	2"	79,4	12,6	250,5	141,0

Product versions

PA 500 SF6 90 VA	Swage fitting, SFS angle 90°, Stainless steel

Despite careful checking, we cannot guarantee the accuracy of all information included on this site, and we accept no liability.