PA 500 SF9 45 A

Swage fitting, SFS-CAT angle 45°

HANSA-FLEX

Properties

Application	Swage fitting for HD 500 hoses
Connection 1	SAE flange connection 6000 PSI
Sealing form 1	flat seal with SF O-ring
Short code	SFS-CAT
suitable for	Caterpillar
Integration	with pull-out protection (interlock)
Scope of supply	Swage nipple + swage ferrule
Material	Steel
Surface	electro galvanised



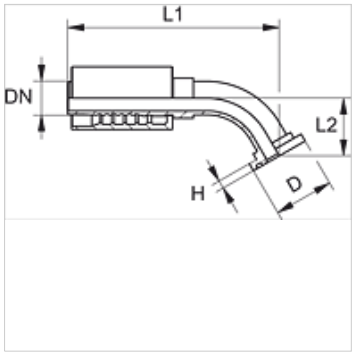

Item

Identification	DN	Size	Inches	Flange size	D (mm)	H (mm)	L1 (mm)	L2 (mm)
PA 720 SF9 45	19	12	3/4"	3/4"	41,3	14,2	139,0	34,0
PA 720 SF9 25 45	19	12	3/4"	1"	47,6	14,2	143,0	37,5
PA 725 SF9 20 45	25	16	1"	3/4"	41,3	14,2	157,0	35,0
PA 725 SF9 45	25	16	1"	1"	47,6	14,2	167,0	36,5
PA 725 SF9 32 45	25	16	1"	1.1/4"	54,0	14,2	172,0	41,5
PA 532 SF9 25 45 A	31	20	1.1/4"	1"	47,6	14,0	174,0	39,5
PA 532 SF9 45 A	31	20	1.1/4"	1.1/4"	54,0	14,0	194,0	44,5
PA 532 SF9 40 45 A	31	20	1.1/4"	1.1/2"	63,5	14,0	198,0	48,5
PA 540 SF9 32 45 A	38	24	1.1/2"	1.1/4"	54,0	14,0	205,5	47,0
PA 540 SF9 45 A	38	24	1.1/2"	1.1/2"	63,5	14,0	226,0	51,0

Despite careful checking, we cannot guarantee the accuracy of all information included on this site, and we accept no liability.