PA 500 SF9 90 A

Swage fitting, SFS-CAT angle 90°

HANSA-FLEX

Properties

Application	Swage fitting for HD 500 hoses
Connection 1	SAE flange connection 6000 PSI
Sealing form 1	flat seal with SF O-ring
Short code	SFS-CAT
suitable for	Caterpillar
Integration	with pull-out protection (interlock)
Scope of supply	Swage nipple + swage ferrule
Material	Steel
Surface	electro galvanised



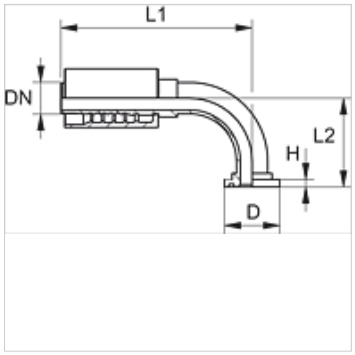

Item

Identification	DN	Size	Inches	Flange size	D (mm)	H (mm)	L1 (mm)	L2 (mm)
PA 720 SF9 90	19	12	3/4"	3/4"	41,3	14,2	127,5	67,5
PA 720 SF9 25 90	19	12	3/4"	1"	47,6	14,2	127,5	72,5
PA 725 SF9 20 90	25	16	1"	3/4"	41,3	14,2	144,0	83,5
PA 725 SF9 90	25	16	1"	1"	47,6	14,2	158,0	78,5
PA 725 SF9 32 90	25	16	1"	1.1/4"	54,0	14,2	158,0	85,0
PA 532 SF9 25 90 A	31	20	1.1/4"	1"	47,6	14,0	161,0	82,0
PA 532 SF9 90 A	31	20	1.1/4"	1.1/4"	54,0	14,0	182,0	97,0
PA 532 SF9 40 90 A	31	20	1.1/4"	1.1/2"	63,5	14,0	182,0	103,0
PA 540 SF9 32 90 A	38	24	1.1/2"	1.1/4"	54,0	14,0	192,0	100,0
PA 540 SF9 90 A	38	24	1.1/2"	1.1/2"	63,5	14,0	215,5	112,0

Despite careful checking, we cannot guarantee the accuracy of all information included on this site, and we accept no liability.