PA 500 SF9 A

Swage fitting, SFS-CAT

Properties

Application	Swage fitting for HD 500 hoses
Connection 1	SAE flange connection 6000 PSI
Sealing form 1	flat seal with SF O-ring
Short code	SFS-CAT
suitable for	Caterpillar
Integration	with pull-out protection (interlock)
Scope of supply	Swage nipple + swage ferrule
Material	Steel
Surface	electro galvanised



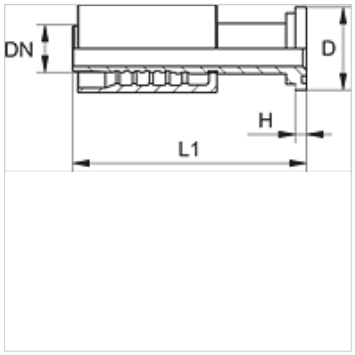

Item

Identification	DN	Size	Inches	Flange size	D (mm)	H (mm)	L1 (mm)
PA 720 SF9	19	12	3/4"	3/4"	41,3	14,3	130,0
PA 720 SF9 25	19	12	3/4"	1"	47,6	14,6	133,5
PA 725 SF9 20	25	16	1"	3/4"	41,3	14,6	137,0
PA 725 SF9	25	16	1"	1"	47,6	14,6	150,0
PA 725 SF9 32	25	16	1"	1.1/4"	54,0	14,6	155,0
PA 532 SF9 25 A	31	20	1.1/4"	1"	47,6	14,6	150,0
PA 532 SF9 A	31	20	1.1/4"	1.1/4"	54,0	14,6	166,5
PA 532 SF9 40 A	31	20	1.1/4"	1.1/4"	63,5	14,6	168,5
PA 540 SF9 32 A	38	24	1.1/2"	1.1/4"	54,0	14,6	163,0
PA 540 SF9 A	38	24	1.1/2"	1.1/2"	63,5	14,6	185,0

Despite careful checking, we cannot guarantee the accuracy of all information included on this site, and we accept no liability.