PA 700 SF 45 VA

Swage fitting, SFL angle 45°

HANSA-FLEX

Properties

Application	Swage fitting for HD 700 hoses
Connection 1	SAE flange connection 3000 PSI
Sealing form 1	flat seal with SF O-ring
Short code	SFL
Standard	SAE J518 ISO 6162-1
Integration	with pull-out protection (interlock)
Scope of supply	Swage nipple + swage ferrule
Material	Stainless steel



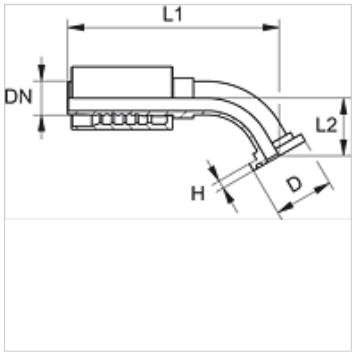

Ordering information

Seals of NBR

FPM (Viton) on request

Item

Identification	DN	Size	Inches	Flange size	D (mm)	H (mm)	L2 (mm)
PA 720 SF 45 VA	19	12	3/4"	3/4"	38,1	6,7	38,0
PA 732 SF 45 VA	31	20	1.1/4"	1.1/4"	50,8	8,0	45,0
PA 732 SF 40 45 VA	31	20	1.1/4"	1.1/2"	60,3	8,0	46,0
PA 740 SF 45 VA	38	24	1.1/2"	1.1/2"	60,3	8,0	49,0
PA 740 SF 50 45 VA	38	24	1.1/2"	2"	71,4	9,5	60,0

Product versions

PA 700 SF 45	Swage fitting, SFL angle 45°, Steel

Despite careful checking, we cannot guarantee the accuracy of all information included on this site, and we accept no liability.