PA 700 SF6 135

Swage fitting, SFS angle 135°

HANSA-FLEX

Properties

Application	Swage fitting for HD 700 hoses
Connection 1	SAE flange connection 6000 PSI
Sealing form 1	flat seal with SF O-ring
Short code	SFS
Standard	SAE J518 ISO 6162-2
Integration	with pull-out protection (interlock)
Scope of supply	Swage nipple + swage ferrule
Material	Steel
Surface	electro galvanised



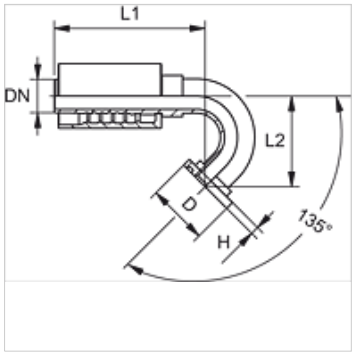

Item

Identification	DN	Size	Inches	Flange size	Operating pressure (bar)	D (mm)	H (mm)	L1 (mm)	L2 (mm)
PA 725 SF6 135	25	16	1"	1"	420,0	47,6	9,5	170,0	100,0

Despite careful checking, we cannot guarantee the accuracy of all information included on this site, and we accept no liability.