PA 700 SF6 45

Swage fitting, SFS angle 45°

HANSA-FLEX

Properties

Application	Swage fitting for HD 700 hoses
Connection 1	SAE flange connection 6000 PSI
Sealing form 1	flat seal with SF O-ring
Short code	SFS
Standard	SAE J518 ISO 6162-2
Integration	with pull-out protection (interlock)
Scope of supply	Swage nipple + swage ferrule
Material	Steel
Surface	electro galvanised



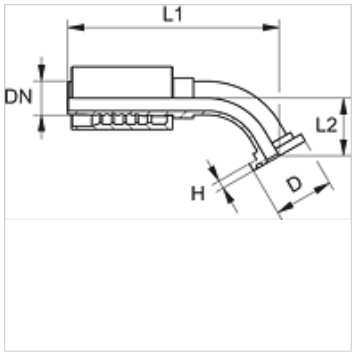

Item

Identification	DN	Size	Inches	Flange size	Operating pressure (bar)	D (mm)	H (mm)	L1 (mm)	L2 (mm)
PA 713 SF6 45	12	8	1/2"	1/2"	420,0	31,8	7,7	95,5	23,0
PA 713 SF6 20 45	12	8	1/2"	3/4"	420,0	41,3	8,8	99,9	23,0
PA 716 SF6 13 45	16	10	5/8"	1/2"	420,0	31,8	7,7	114,0	21,5
PA 716 SF6 20 45	16	10	5/8"	3/4"	420,0	41,3	8,8	117,5	25,0
PA 716 SF6 25 45	16	10	5/8"	1"	420,0	47,6	9,5	121,0	29,0
PA 720 SF6 45	19	12	3/4"	3/4"	420,0	41,3	8,8	135,5	30,0
PA 720 SF6 45 L 52	19	12	3/4"	3/4"	420,0	41,3	8,8	217,0	52,0
PA 720 SF6 45 L 75	19	12	3/4"	3/4"	420,0	41,3	8,8	252,0	75,0
PA 720 SF6 45 L 100	19	12	3/4"	3/4"	420,0	41,3	8,8	268,0	100,0
PA 720 SF6 25 45	19	12	3/4"	1"	420,0	47,6	9,6	139,5	34,5
PA 725 SF6 20 45	25	16	1"	3/4"	420,0	41,3	8,8	164,0	36,5
PA 725 SF6 45	25	16	1"	1"	420,0	47,6	9,6	164,0	33,5
PA 725 SF6 32 45	25	16	1"	1.1/4"	420,0	54,0	10,4	169,0	38,5
PA 732 SF6 25 45 S	31	20	1.1/4"	1"	420,0	47,6	9,5	173,5	38,0
PA 732 SF6 45 S	31	20	1.1/4"	1.1/4"	420,0	54,0	10,3	187,0	44,0
PA 732 SF6 40 45 S	31	20	1.1/4"	1.1/2"	420,0	63,5	12,6	191,5	47,5
PA 740 SF6 32 45	38	24	1.1/2"	1.1/4"	420,0	54,0	10,4	217,5	51,5
PA 740 SF6 45	38	24	1.1/2"	1.1/2"	420,0	63,5	12,6	222,0	49,0
PA 740 SF6 50 45	38	24	1.1/2"	2"	420,0	79,4	12,6	236,0	61,0
PA 750 SF6 45	51	32	2"	2"	420,0	79,4	12,6	274,0	56,0

Product versions

PA 700 SF6 45 VA	Swage fitting, SFS angle 45°, Stainless steel

Despite careful checking, we cannot guarantee the accuracy of all information included on this site, and we accept no liability.