PAY 300 AFL

Swage fitting, DKL

Properties

Connection 1	metric nut thread
Sealing form 1	24°/60° Universal sealing head
Short code	DKL
Standard	ISO 8434-1
Scope of supply	Swage nipple + swage ferrule
Material	Steel
Surface	electro galvanised



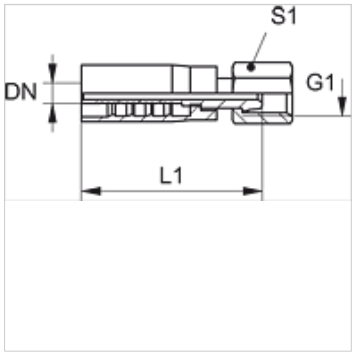

Item

Identification	DN	Size	Inches	G1	for external pipe Ø (mm)	L1 (mm)	S1
PAY 306 AFL	6	4	1/4"	M 14 x 1.5	8	46,0	17
PAY 306 AFL 08	6	4	1/4"	M 16 x 1.5	10	46,0	19
PAY 308 AFL	8	5	5/16"	M 16 x 1.5	10	46,0	19
PAY 310 AFL 08	10	6	3/8"	M 16 x 1.5	10	49,0	22
PAY 310 AFL	10	6	3/8"	M 18 x 1.5	12	48,0	22
PAY 313 AFL	12	8	1/2"	M 22 x 1.5	15	51,0	27
PAY 313 AFL 16	12	8	1/2"	M 26 x 1.5	18	-	-
PAY 316 AFL	16	10	5/8"	M 26 x 1.5	18	-	-
PAY 320 AFL	19	12	3/4"	M 30 x 2	22	-	-

Despite careful checking, we cannot guarantee the accuracy of all information included on this site, and we accept no liability.