PAY 300 AOS 90

Swage fitting, DKOS angle 90°

HANSA-FLEX

Properties

Connection 1	metric nut thread
Sealing form 1	24° outer cone with O-ring
Short code	DKOS
Standard	ISO 8434-1
Scope of supply	Swage nipple + swage ferrule
Material	Steel
Surface	electro galvanised



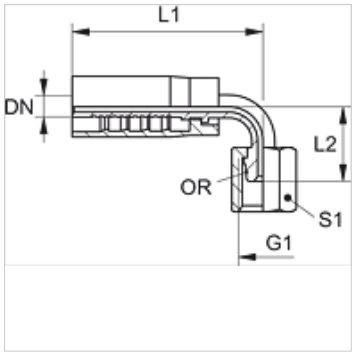

Item

Identification	DN	Size	Inches	G1	for external pipe Ø (mm)	L1 (mm)	L2 (mm)	S1	OR
PAY 308 AOS 90	8	5	5/16"	M 20 x 1.5	12	64,0	36,0	24	9.0 x 1.5
PAY 313 AOS 90	12	8	1/2"	M 24 x 1.5	16	85,0	44,0	30	12.0 x 2.0
PAY 316 AOS 90	16	10	5/8"	M 30 x 2	20	105,0	61,0	36	16.0 x 2.5

Despite careful checking, we cannot guarantee the accuracy of all information included on this site, and we accept no liability.