PAY 300 HS
Swage fitting, CES

Properties

Connection 1	metric cylindrical outer thread
Sealing form 1	24° inner cone
Short code	CES
Standard	ISO 8434-1
Scope of supply	Swage nipple + swage ferrule
Material	Steel
Surface	electro galvanised



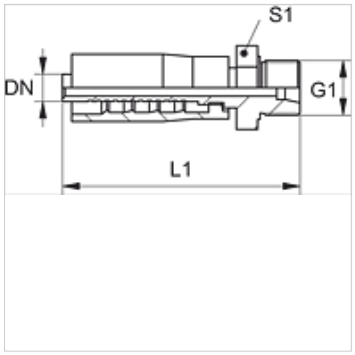

Item

Identification	DN	Size	Inches	G1	for external pipe Ø (mm)	L1 (mm)	S1
PAY 306 HS	6	4	1/4"	M 18 x 1.5	10	65,0	19
PAY 308 HS	8	5	5/16"	M 20 x 1.5	12	62,0	22
PAY 310 HS	10	6	3/8"	M 22 x 1.5	14	71,0	22
PAY 313 HS	12	8	1/2"	M 24 x 1.5	16	74,0	24
PAY 316 HS	16	10	5/8"	M 30 x 2	20	88,0	30
PAY 320 HS	19	12	3/4"	M 36 x 2	25	90,0	36
PAY 325 HS	25	16	1"	M 42 x 2	30	92,0	46

Despite careful checking, we cannot guarantee the accuracy of all information included on this site, and we accept no liability.