PAY 300 SF 45

Swage fitting, SFL angle 45°

HANSA-FLEX

Properties

Connection 1	SAE flange connection 3000 PSI
Sealing form 1	flat seal with SF O-ring
Short code	SFL
Standard	SAE J518 ISO 6162-1
Scope of supply	Swage nipple + swage ferrule
Material	Steel
Surface	electro galvanised



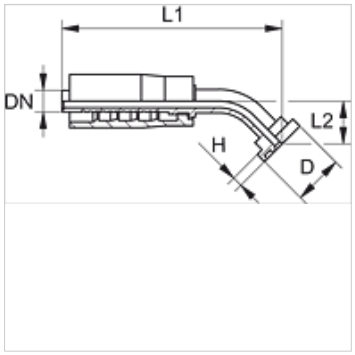

Item

Identification	DN	Size	Inches	Flange size	D (mm)	H (mm)	L1 (mm)	L2 (mm)
PAY 316 SF 20 45	16	10	5/8"	3/4"	38,1	6,7	113,5	24,0
PAY 325 SF 45	25	16	1"	1"	44,4	8,0	125,0	32,0
PAY 332 SF 45	31	20	1.1/4"	1.1/4"	50,8	8,0	174,0	37,0

Despite careful checking, we cannot guarantee the accuracy of all information included on this site, and we accept no liability.