PNY 2100 AFL

Swage nipple, DKL

Properties

Connection 1	metric nut thread
Sealing form 1	24°/60° Universal sealing head
Short code	DKL
Standard	ISO 8434-1
Material	Steel
Surface	electro galvanised



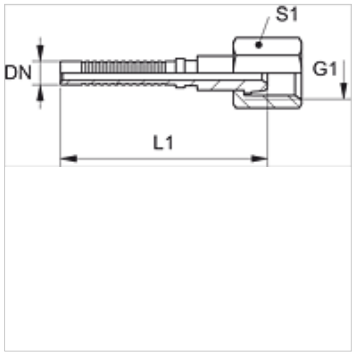

Note

Appropriate ferrule: PHY 2106.

Item

Identification	DN	Size	Inches	G1	for external pipe Ø (mm)	S1
PNY 2106 AFL	6	4	1/4"	M 14 x 1.5	8	17

Despite careful checking, we cannot guarantee the accuracy of all information included on this site, and we accept no liability.