PNY 2100 HN

Swage nipple, AGN

Properties

Connection 1	NPT external threads
Sealing form 1	thread seal, additional 60° inner cone.
Short code	AGN
Material	Steel
Surface	electro galvanised



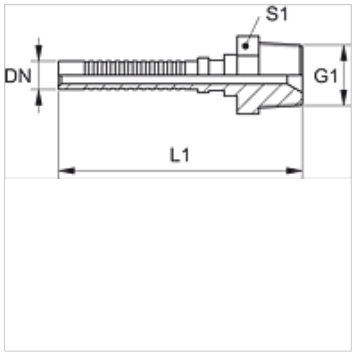

Note

Appropriate ferrule: PHY 2106.

Item

Identification	DN	Size	Inches	G1	S1
PNY 2106 HN	6	4	1/4"	1/4" -18 NPT	14
PNY 2106 HN 10	6	4	1/4"	3/8" -18 NPT	19

Despite careful checking, we cannot guarantee the accuracy of all information included on this site, and we accept no liability.