SFH (6000 PSI) CAT

Flange clamp 6000 PSI (CAT)

HANSA-FLEX

Properties

suitable for	Caterpillar
Material	Steel
Surface	electro galvanised



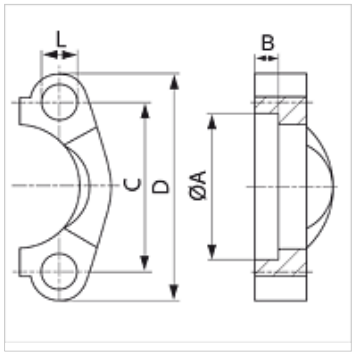

Note

Recommended screws are listed in the columns M (metr) and M (unc).

Item

Identification	Flange size	PB 10.9 (bar)	A (mm)	B (mm)	C (mm)	D (mm)	L (mm)	M metr.	M unc
SFH9 20	3/4"	400	42,1	13,3	50,8	71	10,7	M 10 x 35	3/8" x 1.1/2"
SFH9 25	1"	400	48,4	13,3	57,2	81	13,0	M 12 x 45	-
SFH9 32	1.1/4"	400	54,8	13,3	66,7	95	15,0	M 14 x 45	-
SFH9 40	1.1/2"	400	64,3	13,3	79,4	11	17,0	M 16 x 55	5/8" x 2"

Accessories

AFS SCHR M	Metric screw set, hexagon socket
AFS SCHR U	UNC screw set, hexagon socket
SCHRAUBE M	Hexagon socket screw
SCHRAUBE M VZ	Hexagon socket screw

Despite careful checking, we cannot guarantee the accuracy of all information included on this site, and we accept no liability.