SIN B
Swage nipple, RGN

HANSA-FLEX

Properties

Connection 1	Banjo for metric hollow screw
Sealing form 1	Sealed by copper ring
Short code	RGN
Standard	DIN 7642
Material	Steel
Surface	electro galvanised



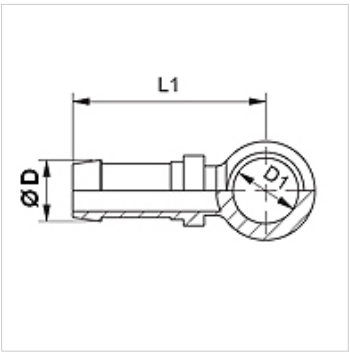

Note

Choose the appropriate ferrule based on the hose type.

Item

Identification	DN	Size	Inches	Ø D (mm)	D1 (mm)	for hollow screw
SIN 03 B 02	3	2	1/8"	5,0	8	M 8
SIN 04 B	4	3	3/16"	6,0	10	M 10
SIN 04 B 06	4	3	3/16"	6,0	12	M 12
SIN 04 B 08	4	3	3/16"	6,0	14	M 14
SIN 06 B 04	6	4	1/4"	8,0	10	M 10
SIN 06 B	6	4	1/4"	8,0	12	M 12
SIN 06 B 08	6	4	1/4"	8,0	14	M 14
SIN 08 B 06	8	5	5/16"	10,0	12	M 12
SIN 08 B	8	5	5/16"	10,0	14	M 14
SIN 08 B 10	8	5	5/16"	10,0	16	M 16
SIN 08 B 13	8	5	5/16"	10,0	18	M 18
SIN 10 B	10	6	3/8"	12,0	16	M 16
SIN 10 B 13	10	6	3/8"	12,0	18	M 18
SIN 13 B	12	8	1/2"	15,0	18	M 18
SIN 13 B 16	12	8	1/2"	15,0	22	M 22
SIN 13 B 20	12	8	1/2"	15,0	26	M 26
SIN 16 B	16	10	5/8"	18,0	22	M 22
SIN 16 B 20	16	10	5/8"	18,0	26	M 26

Despite careful checking, we cannot guarantee the accuracy of all information included on this site, and we accept no liability.