SIN B 90

Swage nipple, RGN angle 90°

HANSA-FLEX

Properties

Connection 1	Banjo for metric hollow screw
Sealing form 1	Sealed by copper ring
Short code	RGN
Standard	DIN 7642
Material	Steel
Surface	electro galvanised



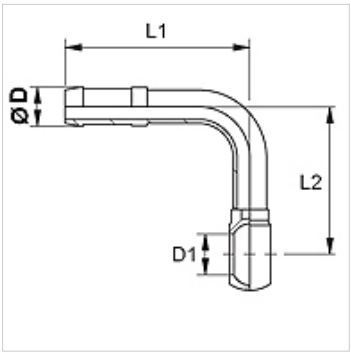

Note

Choose the appropriate ferrule based on the hose type.

Item

Identification	DN	Size	Inches	Ø D (mm)	D1 (mm)	for hollow screw	L1 (mm)	L2 (mm)
SIN 03 B 02 90	3	2	1/4"	5,0	8	M 8	45	27
SIN 04 B 90	4	3	3/16"	6,0	10	M 10	45	45
SIN 06 B 90	6	4	1/4"	8,0	12	M 12	52	42
SIN 08 B 90	8	5	5/16"	10,0	14	M 14	58	54

Despite careful checking, we cannot guarantee the accuracy of all information included on this site, and we accept no liability.