SIN HN
Swage nipple, AGN

Properties

Connection 1	NPT external threads
Sealing form 1	thread seal
Short code	AGN
Standard	SAE J516 SAE J514
Material	Steel
Surface	electro galvanised



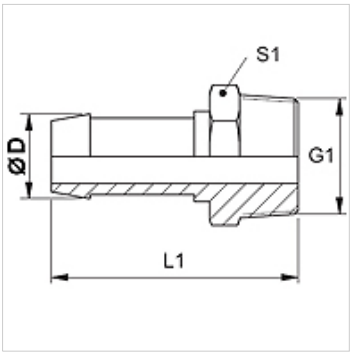

Note

Choose the appropriate ferrule based on the hose type.

Item

Identification	DN	Size	Inches	Ø D (mm)	G1
SIN 03 HN 04	3	2	1/8"	5,0	1/8" -27 NPT
SIN 04 HN	4	3	3/16"	6,0	1/8" -27 NPT
SIN 04 HN 06	4	3	3/16"	6,0	1/4" -18 NPT
SIN 06 HN	6	4	1/4"	8,0	1/4" -18 NPT
SIN 08 HN 10	8	5	5/16"	10,0	3/8" -18 NPT

Despite careful checking, we cannot guarantee the accuracy of all information included on this site, and we accept no liability.