SIN T VB

Swage nipple, VB, T shaped

Properties

Connection 1 - 3	Hose connection
Material	Steel
Surface	electro galvanised



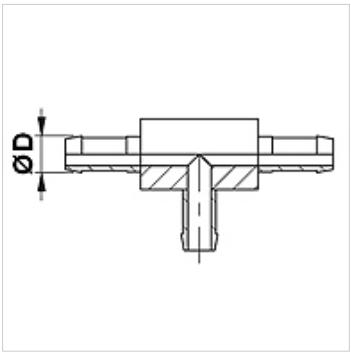

Note

Choose the appropriate ferrule based on the hose type.

Item

Identification	DN	Size	Inches	Ø D (mm)
SIN 03 T VB	3	2	1/8"	5,0
SIN 04 T VB	4	3	3/16"	6,0
SIN 06 T VB	6	4	1/4"	8,0
SIN 08 T VB	8	5	5/16"	10,0
SIN 10 T VB	10	6	3/8"	12,0

Despite careful checking, we cannot guarantee the accuracy of all information included on this site, and we accept no liability.