TRN AB
Screw nipple, DKR

Properties

Connection 1	BSP nut thread
Sealing form 1	60° outer cone
Short code	DKR
Standard	ISO 8434-6 BS 5200
Material	Steel
Surface	electro galvanised



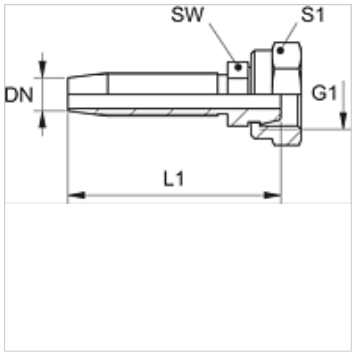

Note

Choose the appropriate ferrule based on the hose type.

Item

Identification	DN	Size	Inches	G1	L1 (mm)	AF (mm)	S1
TRN 04 AB 06	5	3	3/16"	G 1/4" -19	42,5	12	17
TRN 06 AB	6	4	1/4"	G 1/4" -19	58,5	12	17
TRN 10 AB	10	6	3/8"	G 3/8" -19	68,5	17	22

Despite careful checking, we cannot guarantee the accuracy of all information included on this site, and we accept no liability.