TRP AJ

Swage fitting, DKJ

Properties

Connection 1	UN/UNF nut threads
Sealing form 1	74° inner cone
Short code	DKJ
Standard	ISO 8434-2
Scope of supply	Swage nipple + swage ferrule
Material	Steel
Surface	electro galvanised



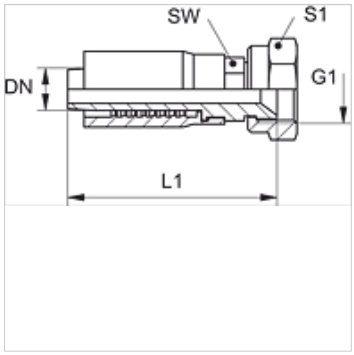

Item

Identification	DN	Size	Inches	G1	L1 (mm)	AF (mm)	S1
TRP 04 AJ 06	5	3	3/16"	7/16"-20 UNF	55,0	14	17
TRP 06 AJ	6	4	1/4"	7/16"-20 UNF	61,0	14	17
TRP 06 AJ 08	6	4	1/4"	1/2"-20 UNF	61,0	14	17
TRP 06 AJ 10	6	4	1/4"	9/16"-18 UNF	61,0	14	19
TRP 08 AJ 10	8	5	5/16"	9/16"-18 UNF	64,0	17	19
TRP 10 AJ	10	6	3/8"	9/16"-18 UNF	69,0	19	19

Despite careful checking, we cannot guarantee the accuracy of all information included on this site, and we accept no liability.