L HRO HB

Screw-in socket, L shaped

Properties

Connection 1	BSP external thread, cylindrical
Sealing form 1	form G
Connection 2 + 3	BSP cylindrical external threads
Sealing form 2 + 3	60° inner cone
Design	Screw-in sockets
Construction	L shaped
Material	Steel
Surface	electro galvanised



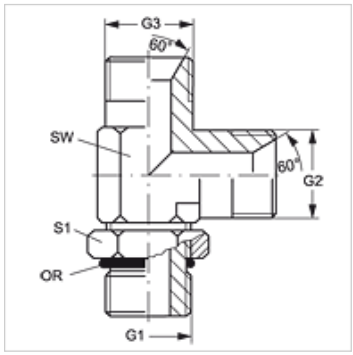

Item

Identification	G1	G2 + G3	AF (mm)	S1	OR
L HRO 02 HB	G 1/8" -28	G 1/8" -28	11	16	7.65 x 1.78
L HRO 04 HB 02	G 1/4" -19	G 1/8" -28	14	20	10.78 x 2.62
L HRO 04 HB	G 1/4" -19	G 1/4" -19	14	20	10.78 x 2.62
L HRO 04 HB 06	G 1/4" -19	G 3/8" -19	19	20	10.78 x 2.62
L HRO 06 HB 04	G 3/8" -19	G 1/4" -19	19	24	13.94 x 2.62
L HRO 06 HB	G 3/8" -19	G 3/8" -19	19	24	13.94 x 2.62
L HRO 06 HB 08	G 3/8" -19	G 1/2" -14	22	24	13.94 x 2.62
L HRO 08 HB 06	G 1/2" -14	G 3/8" -19	22	28	17.86 x 2.62
L HRO 08 HB	G 1/2" -14	G 1/2" -14	22	28	17.86 x 2.62
L HRO 08 HB 10	G 1/2" -14	G 5/8" -14	22	28	17.86 x 2.62
L HRO 08 HB 12	G 1/2" -14	G 3/4" -14	27	28	17.86 x 2.62
L HRO 12 HB 08	G 3/4" -14	G 1/2" -14	27	35	23.47 x 2.62
L HRO 12 HB	G 3/4" -14	G 3/4" -14	27	35	23.47 x 2.62
L HRO 12 HB 16	G 3/4" -14	G 1" -11	33	35	23.47 x 2.62
L HRO 16 HB 12	G 1" -11	G 3/4" -14	33	43	29.74 x 3.53
L HRO 16 HB	G 1" -11	G 1" -11	33	43	29.74 x 3.53
L HRO 20 HB 16	G 1.1/4" -11	G 1" -11	41	52	37.69 x 3.53
L HRO 20 HB	G 1.1/4" -11	G 1.1/4" -11	41	52	37.69 x 3.53
L HRO 24 HB	G 1.1/2" -11	G 1.1/2" -11	48	58	44.04 x 3.53

AF = Width across flats

Despite careful checking, we cannot guarantee the accuracy of all information included on this site, and we accept no liability.