T AB HB VA

Screw-on socket, T shaped

Properties

Connection 1	BSP nut thread
Sealing form 1	60° outer cone
Connection 2 + 3	BSP cylindrical external threads
Sealing form 2 + 3	60° inner cone
Design	Adjustable direction screw-on socket
Construction	T shaped
Material	Stainless steel



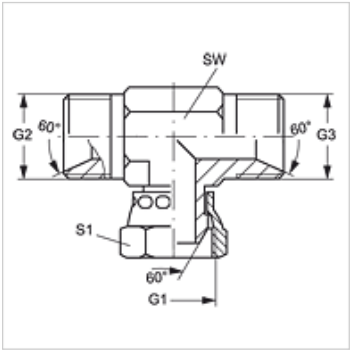

Item

Identification	G1	G2 + G3	AF (mm)	S1
T AB 02 HB VA	G 1/8" -28	G 1/8" -28	12	14
T AB 04 HB VA	G 1/4" -19	G 1/4" -19	14	19
T AB 06 HB VA	G 3/8" -19	G 3/8" -19	17	22
T AB 08 HB VA	G 1/2" -14	G 1/2" -14	19	27
T AB 12 HB VA	G 3/4" -14	G 3/4" -14	27	32
T AB 16 HB VA	G 1" -11	G 1" -11	36	41
T AB 20 HB VA	G 1.1/4" -11	G 1.1/4" -11	41	50
T AB 24 HB VA	G 1.1/2" -11	G 1.1/2" -11	50	55

SW, S1, S2 = With across flats

Product versions

T AB HB	Screw-on socket, T shaped, Steel

Despite careful checking, we cannot guarantee the accuracy of all information included on this site, and we accept no liability.