T HB AB

Screw-in socket, T shaped

Properties

Connection 1	BSP external thread, cylindrical
Sealing form 1	60° inner cone
Connection 2 + 3	BSP nut thread
Sealing form 2 + 3	60° outer cone
Design	Screw-in sockets
Construction	T shaped
Material	Steel
Surface	electro galvanised



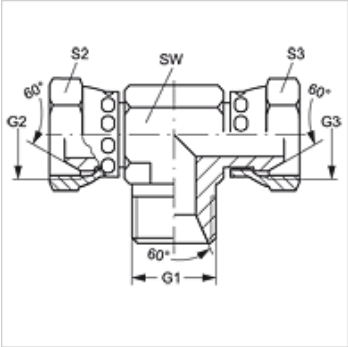

Item

Identification	G1	G2 + G3	AF (mm)	S2 + S3
T HB 04 AB	G 1/4" -19	G 1/4" -19	14	19
T HB 06 AB	G 3/8" -19	G 3/8" -19	19	22
T HB 08 AB	G 1/2" -14	G 1/2" -14	22	27
T HB 12 AB	G 3/4" -14	G 3/4" -14	27	32
T HB 16 AB	G 1" -11	G 1" -11	33	41

SW, S1, S2 = With across flats

Despite careful checking, we cannot guarantee the accuracy of all information included on this site, and we accept no liability.