T HJ
Connection socket, T shaped

Properties

Connection 1 - 3	UN/UNF external threads
Sealing form 1 - 3	74° outer cone
Design	Connection sockets
Construction	T shaped
Material	Steel
Surface	electro galvanised



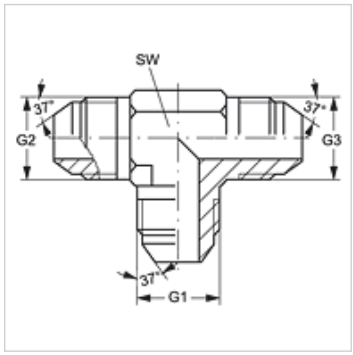

Item

Identification	G1 - G3	AF (mm)
T HJ 04	7/16"-20 UNF	11
T HJ 05	1/2"-20 UNF	13
T HJ 06	9/16"-18 UNF	14
T HJ 08	3/4"-16 UNF	19
T HJ 10	7/8"-14 UNF	22
T HJ 12	1.1/16" -12 UN	27
T HJ 14	1.3/16" -12 UN	33
T HJ 16	1.5/16" -12 UN	33
T HJ 20	1.5/8" -12 UN	41
T HJ 24	1.7/8" -12 UN	48
T HJ 32	2.1/2" -12 UN	66

AF = Width across flats

Product versions

T HJ VA	Connection socket, T shaped, Stainless steel

Despite careful checking, we cannot guarantee the accuracy of all information included on this site, and we accept no liability.