T HMO HB

Screw-in socket, T shaped

Properties

Connection 1	metric cylindrical outer thread
Sealing form 1	Shape F
Connection 2 + 3	BSP cylindrical external threads
Sealing form 2 + 3	60° inner cone
Design	Adjustable direction screw-in socket
Construction	T shaped
Material	Steel
Surface	electro galvanised



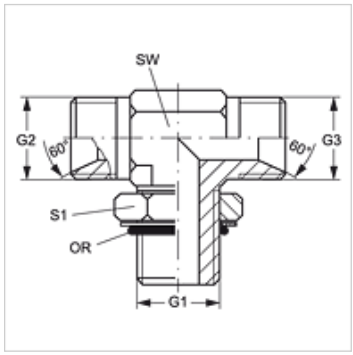

Item

Identification	G1	G2 + G3	AF (mm)	S1	OR
T HMO 12 HB 04	M 12 x 1.5	G 1/4" -19	13	18	9.3 x 2.4
T HMO 14 HB 04	M 14 x 1.5	G 1/4" -19	14	20	11.3 x 2.4
T HMO 14 HB 06	M 14 x 1.5	G 3/8" -19	19	20	11.3 x 2.4
T HMO 16 HB 06	M 16 x 1.5	G 3/8" -19	19	22	13.3 x 2.4
T HMO 18 HB 06	M 18 x 1.5	G 3/8" -19	19	24	15.3 x 2.4
T HMO 18 HB 08	M 18 x 1.5	G 1/2" -14	19	24	15.3 x 2.4
T HMO 22 HB 12	M 22 x 1.5	G 3/4" -14	27	28	19.3 x 2.4

SW, S1, S2 = With across flats

Despite careful checking, we cannot guarantee the accuracy of all information included on this site, and we accept no liability.