T HMOK HJOF

Screw-in socket, T shaped

Properties

Connection 1	metric cylindrical outer thread
Sealing form 1	Thread socket with O-ring + spacer diaphragm ring
Connection 2 + 3	ORFS external threads
Sealing form 2 + 3	flat seal with O-ring
Design	Adjustable direction screw-in socket
Construction	T shaped
Material	Steel
Surface	electro galvanised



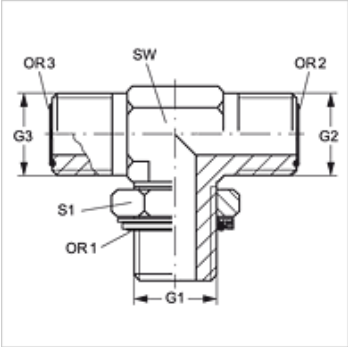

Item

Identification	G1	G2 + G3	AF (mm)	S1	OR1	OR2 + OR3
T HMOK 12 HJOF 04	M 12 x 1.5	9/16"-18 UNF	14	17	9.4 x 2.1	7.66 x 1.78
T HMOK 16 HJOF 06	M 16 x 1.5	11/16" -16 UN	19	22	13.4 x 2.1	9.25 x 1.78
T HMOK 18 HJOF 08	M 18 x 1.5	13/16" -16 UN	19	24	15.4 x 2.1	12.42 x 1.78
T HMOK 22 HJOF 10	M 22 x 1.5	1" -14 UNS	27	27	19.4 x 2.1	15.60 x 1.78
T HMOK 27 HJOF 12	M 27 x 2	1.3/16" -12 UN	30	32	23.7 x 2.8	18.77 x 1.78
T HMOK 33 HJOF 16	M 33 x 2	1.7/16" -12 UN	36	41	29.7 x 2.8	23.52 x 1.78
T HMOK 42 HJOF 20	M 42 x 2	1.11/16" -12 UN	41	50	38.7 x 2.8	29.87 x 1.78
T HMOK 48 HJOF 24	M 48 x 2	2" -12 UN	48	55	46.7 x 2.8	37.82 x 1.78

SW, S1, S2 = With across flats

Spare parts

KAMMRING M	Diaphragm ring, metric

Despite careful checking, we cannot guarantee the accuracy of all information included on this site, and we accept no liability.