T HRO HJ

Screw-in socket, T shaped

HANSA-FLEX

Properties

Connection 1	BSP external thread, cylindrical
Sealing form 1	form G
Connection 2 + 3	UN/UNF external threads
Sealing form 2 + 3	74° outer cone
Design	Adjustable direction screw-in socket
Construction	T shaped
Material	Steel
Surface	electro galvanised



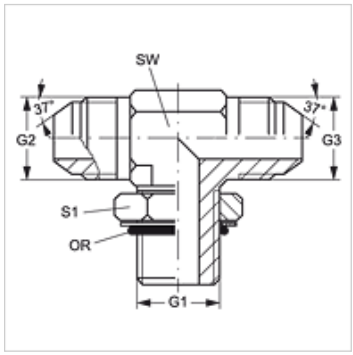

Item

Identification	G1	G2 + G3	AF (mm)	S1	OR
T HRO 02 HJ 04	G 1/8" -28	7/16"-20 UNF	11	14	8.00 x 2.00
T HRO 02 HJ 05	G 1/8" -28	1/2"-20 UNF	14	14	8.00 x 2.00
T HRO 04 HJ	G 1/4" -19	7/16"-20 UNF	11	19	10.77 x 2.62
T HRO 04 HJ 05	G 1/4" -19	1/2"-20 UNF	14	19	10.77 x 2.62
T HRO 04 HJ 06	G 1/4" -19	9/16"-18 UNF	14	19	10.77 x 2.62
T HRO 04 HJ 08	G 1/4" -19	3/4"-16 UNF	19	19	10.77 x 2.62
T HRO 06 HJ 04	G 3/8" -19	7/16"-20 UNF	19	22	13.94 x 2.62
T HRO 06 HJ 05	G 3/8" -19	1/2"-20 UNF	19	22	13.94 x 2.62
T HRO 06 HJ	G 3/8" -19	9/16"-18 UNF	19	22	13.94 x 2.62
T HRO 06 HJ 08	G 3/8" -19	3/4"-16 UNF	19	22	13.94 x 2.62
T HRO 06 HJ 10	G 3/8" -19	7/8"-14 UNF	22	22	13.94 x 2.62
T HRO 08 HJ 04	G 1/2" -14	7/16"-20 UNF	22	27	17.86 x 2.62
T HRO 08 HJ 06	G 1/2" -14	9/16"-18 UNF	22	27	17.86 x 2.62
T HRO 08 HJ	G 1/2" -14	3/4"-16 UNF	22	27	17.86 x 2.62
T HRO 08 HJ 10	G 1/2" -14	7/8"-14 UNF	22	27	17.86 x 2.62
T HRO 08 HJ 12	G 1/2" -14	1.1/16" -12 UN	27	27	17.86 x 2.62
T HRO 12 HJ 08	G 3/4" -14	3/4"-16 UNF	27	36	23.47 x 2.62
T HRO 12 HJ 10	G 3/4" -14	7/8"-14 UNF	27	36	23.47 x 2.62
T HRO 12 HJ	G 3/4" -14	1.1/16" -12 UN	27	36	23.47 x 2.62
T HRO 12 HJ 16	G 3/4" -14	1.5/16" -12 UN	33	36	23.47 x 2.62
T HRO 16 HJ 12	G 1" -11	1.1/16" -12 UN	33	41	29.74 x 3.53
T HRO 16 HJ	G 1" -11	1.5/16" -12 UN	33	41	29.74 x 3.53
T HRO 16 HJ 20	G 1" -11	1.5/8" -12 UN	41	41	29.74 x 3.53
T HRO 20 HJ 16	G 1.1/4" -11	1.5/16" -12 UN	41	50	37.69 x 3.53
T HRO 20 HJ	G 1.1/4" -11	1.5/8" -12 UN	41	50	37.69 x 3.53
T HRO 20 HJ 24	G 1.1/4" -11	1.7/8" -12 UN	48	50	37.69 x 3.53
T HRO 24 HJ	G 1.1/2" -11	1.7/8" -12 UN	48	60	44.04 x 3.53

SW, S1, S2 = With across flats

Despite careful checking, we cannot guarantee the accuracy of all information included on this site, and we accept no liability.