T HROK HB

Screw-in socket, T shaped

Properties

Connection 1	BSP external thread, cylindrical
Sealing form 1	Thread socket with O-ring + spacer diaphragm ring
Connection 2 + 3	BSP cylindrical external threads
Sealing form 2 + 3	60° inner cone
Design	Adjustable direction screw-in socket
Construction	T shaped
Material	Steel
Surface	electro galvanised



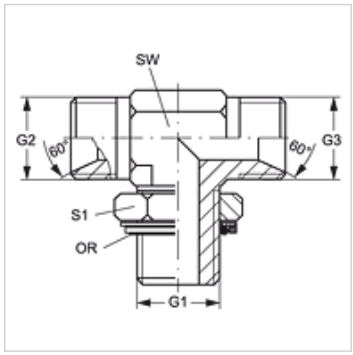

Item

Identification	G1	G2 + G3	AF (mm)	S1	OR
T HROK 02 HB	G 1/8" -28	G 1/8" -28	14	14	7.65 x 1.78
T HROK 04 HB 02	G 1/4" -19	G 1/8" -28	14	19	10.78 x 2.62
T HROK 04 HB	G 1/4" -19	G 1/4" -19	19	19	10.78 x 2.62
T HROK 04 HB 06	G 1/4" -19	G 3/8" -19	19	19	10.78 x 2.62
T HROK 06 HB 04	G 3/8" -19	G 1/4" -19	19	22	13.94 x 2.62
T HROK 06 HB	G 3/8" -19	G 3/8" -19	19	22	13.94 x 2.62
T HROK 06 HB 08	G 3/8" -19	G 1/2" -14	19	22	13.94 x 2.62
T HROK 08 HB 06	G 1/2" -14	G 3/8" -19	27	27	17.86 x 2.62
T HROK 08 HB	G 1/2" -14	G 1/2" -14	27	27	17.86 x 2.62
T HROK 08 HB 10	G 1/2" -14	G 5/8" -14	27	27	17.86 x 2.62
T HROK 08 HB 12	G 1/2" -14	G 3/4" -14	30	27	17.86 x 2.62
T HROK 12 HB 08	G 3/4" -14	G 1/2" -14	30	36	23.47 x 2.62
T HROK 12 HB	G 3/4" -14	G 3/4" -14	30	36	23.47 x 2.62
T HROK 12 HB 16	G 3/4" -14	G 1" -11	36	36	23.47 x 2.62
T HROK 16 HB 12	G 1" -11	G 3/4" -14	36	41	29.74 x 3.53
T HROK 16 HB	G 1" -11	G 1" -11	36	41	29.74 x 3.53
T HROK 20 HB 16	G 1.1/4" -11	G 1" -11	41	50	37.69 x 3.53
T HROK 20 HB	G 1.1/4" -11	G 1.1/4" -11	51	50	37.69 x 3.53
T HROK 24 HB	G 1.1/2" -11	G 1.1/2" -11	50	55	44.04 x 3.53

SW, S1, S2 = With across flats

Spare parts

KAMMRING G	Spacer diaphragm ring, imperial

Despite careful checking, we cannot guarantee the accuracy of all information included on this site, and we accept no liability.