FLD R T

Flat sealing ring for fire brigade couplings

Properties

Design	Flat seal for fixed coupling with inner thread
Material	PTFE



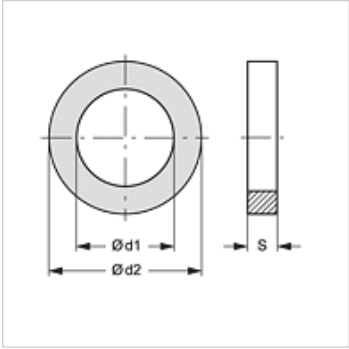

Item

Identification	for thread	Ø d1 (mm)	Ø d2 (mm)	S (mm)
FLD R 1 T	G 1"	20	33	2
FLD R 1 1/4 T	G 1.1/4”	33	42	2
FLD R 1 1/2 T	G 1.1/2”	39	48	2
FLD R 2 T	G 2"	47	60	2
FLD R 2 1/2 T	G 2 1/2"	66	76	2
FLD R 3 T	G 3"	76	88	2
FLD R 4 T	G 4"	102	113	2
FLD R 4 1/2 T	G 4 1/2"	105	126	2
FLD R 5 T	G 5"	122	140	2

Product versions

FLD R N
FLD R N W

Spare part for following products

FK KG IR AL	Fixed coupling for fire brigade couplings
FK KG IR MG	Fixed coupling for fire brigade couplings

Despite careful checking, we cannot guarantee the accuracy of all information included on this site, and we accept no liability.