JG 01 (keg.)
Screw-in connectors

HANSA-FLEX

Properties

Application	Pneumatic, vacuum and food applications
Connection 1	BSPT conical external threads
Sealing form 1	thread seal
Connection 2	Plug in sleeve
Construction	straight
Design	Screw-in connectors
Colour	black
Media	Air fluid media inert gases, e.g., N2/CO2
Material	Acetal copolymer body; nitrile O-ring
Standard	



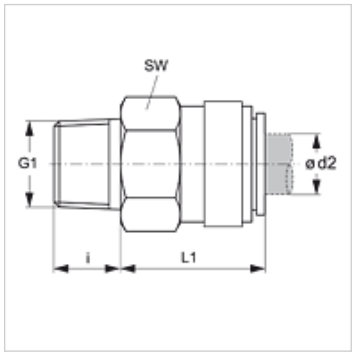

Item

Identification	Ø d2 (mm)	G1	i (mm)	L1 (mm)	AF (mm)
JG 01 04 01 E	4	R 1/8" K	10	15	15
JG 01 04 02 E	4	R 1/4" K	11	14	17
JG 01 05 01 E	5	R 1/8" K	10	15	15
JG 01 05 02 E	5	R 1/4" K	11	14	17
JG 01 06 01 E	6	R 1/8" K	10	18	17
JG 01 06 02 E	6	R 1/4" K	11	14	17
JG 01 08 01 E	8	R 1/8" K	10	19	17
JG 01 08 02 E	8	R 1/4" K	11	14	17
JG 01 08 03 E	8	R 3/8" K	13	14	20
JG 01 10 02 E	10	R 1/4" K	11	21	20
JG 01 10 03 E	10	R 3/8" K	13	17	20
JG 01 10 04 E	10	R 1/2" K	16	15	22
JG 01 12 03 E	12	R 3/8" K	13	27	24
JG 01 12 04 E	12	R 1/2" K	16	22	24

Accessories

JG 19 E	Cap for connectors
JG 18 S	Locking ring for connectors

Despite careful checking, we cannot guarantee the accuracy of all information included on this site, and we accept no liability.