JG 09 (zyl.)

Screw-in connector, angle 90°

HANSA-FLEX

Properties

Application	Pneumatic, vacuum and food applications
Connection 1	BSP external thread, cylindrical
Sealing form 1	encapsulated O-ring on screw-in socket
Connection 2	Plug in sleeve
Construction	Angle 90°
Design	Screw-in connectors
Colour	black
Media	Air fluid media inert gases, e.g., N2/CO2
Material	Acetal copolymer body; nitrile O-ring



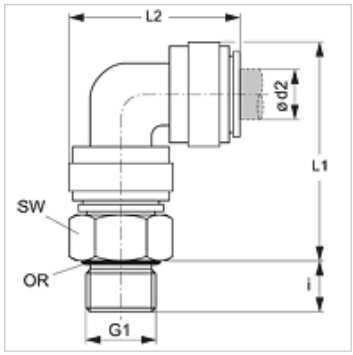

Item

Identification	Ø d2 (mm)	G1	i (mm)	L1 (mm)	L2 (mm)	AF (mm)
JG 09 04 11 E	4	G 1/8" -28	5,5	30,0	24,0	14
JG 09 04 12 E	4	G 1/4" -19	8,0	31,0	24,0	17
JG 09 05 11 E	5	G 1/8" -28	5,5	30,0	24,0	14
JG 09 05 12 E	5	G 1/4" -19	8,0	31,0	24,0	17
JG 09 06 11 E	6	G 1/8" -28	5,5	34,0	27,0	15
JG 09 06 12 E	6	G 1/4" -19	8,0	35,0	27,0	17
JG 09 08 11 E	8	G 1/8" -28	5,5	36,0	30,0	17
JG 09 08 12 E	8	G 1/4" -19	8,0	37,0	30,0	17
JG 09 08 13 E	8	G 3/8" -19	9,5	37,0	30,0	22
JG 09 10 12 E	10	G 1/4" -19	8,0	42,0	35,0	20
JG 09 10 13 E	10	G 3/8" -19	9,5	42,0	35,0	22
JG 09 10 14 E	10	G 1/2" -14	12,5	42,0	35,0	27
JG 09 12 13 E	12	G 3/8" -19	9,5	50,0	44,0	26
JG 09 12 14 E	12	G 1/2" -14	12,5	50,0	44,0	30
JG 09 15 13 E	15	G 3/8" -19	11,3	65,5	50,6	22
JG 09 15 14 E	15	G 1/2" -14	14,5	65,5	50,6	27
JG 09 18 14 E	18	G 1/2" -14	14,5	77,0	59,7	27
JG 09 22 14 E	22	G 1/2" -14	14,5	82,0	66,0	27
JG 09 22 16 E	22	G 3/4" -14	17,0	83,6	66,0	37

missing dimensions available on request

Accessories

JG 18 S	Locking ring for connectors
JG 19 E	Cap for connectors

Despite careful checking, we cannot guarantee the accuracy of all information included on this site, and we accept no liability.