JG 10 (keg.)
Screw-in connector, T shaped

HANSA-FLEX

Properties

Application	Pneumatic, vacuum and food applications
Connection 1	BSPT conical external threads
Sealing form 1	thread seal
Connection 2 + 3	Plug in sleeve
Construction	T shaped
Design	Screw-in connectors
Colour	black
Media	Air fluid media inert gases, e.g., N2/CO2
Material	Acetal copolymer body; nitrile O-ring



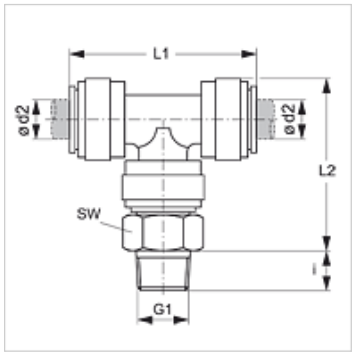

Item

Identification	Ø d2 (mm)	G1	i (mm)	L1 (mm)	L2 (mm)	AF (mm)
JG 10 04 01 E	4	R 1/8" K	10	35	29	15
JG 10 04 02 E	4	R 1/4" K	11	35	29	17
JG 10 05 01 E	5	R 1/8" K	10	35	29	15
JG 10 05 02 E	5	R 1/4" K	11	35	29	17
JG 10 06 01 E	6	R 1/8" K	10	40	32	17
JG 10 06 02 E	6	R 1/4" K	11	40	32	17
JG 10 08 01 E	8	R 1/8" K	10	42	35	17
JG 10 08 02 E	8	R 1/4" K	11	42	35	17
JG 10 08 03 E	8	R 3/8" K	13	42	35	20
JG 10 10 02 E	10	R 1/4" K	11	50	40	20
JG 10 10 03 E	10	R 3/8" K	13	50	40	20
JG 10 10 04 E	10	R 1/2" K	16	50	40	22
JG 10 12 03 E	12	R 3/8" K	13	65	49	24
JG 10 12 04 E	12	R 1/2" K	16	65	49	24

Accessories

JG 19 E	Cap for connectors
JG 08	Sealing plugs
JG 18 S	Locking ring for connectors

Despite careful checking, we cannot guarantee the accuracy of all information included on this site, and we accept no liability.