JG 12
Bulkhead connectors

HANSA-FLEX

Properties

Application	Pneumatic, vacuum and food applications
Connection 1 + 2	Plug in sleeve
Construction	straight
Design	Bulkhead connector
Colour	black
Media	Air fluid media inert gases, e.g., N2/CO2
Material	Acetal copolymer body; nitrile O-ring



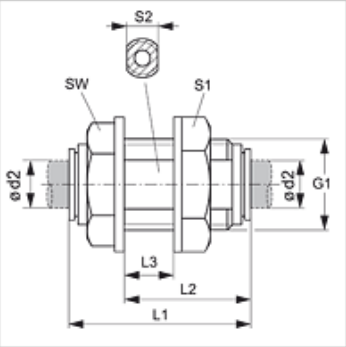

Item

Identification	Ø d2 (mm)	G1	L1 (mm)	L2 (mm)	L3 (mm)	S1	S2	AF (mm)
JG 12 04 E	4	G 3/8" -19	35	25	13,5	20	15	19
JG 12 05 E	5	G 3/8" -19	35	25	13,5	20	15	19
JG 12 06 E	6	G 3/8" -19	34	25	13,5	20	15	19
JG 12 08 E	8	G 1/2" -14	40	29	16,0	25	20	22
JG 12 10 E	10	G 1/2" -14	41	29	16,0	25	20	22
JG 12 12 E	12	G 3/4" -14	52	38	22,5	32	24	28

Accessories

JG 18 S	Locking ring for connectors
JG 19 E	Cap for connectors

Despite careful checking, we cannot guarantee the accuracy of all information included on this site, and we accept no liability.