JG 45 (UN/UNF)
Screw-on connector

HANSA-FLEX

Properties

Application	Pneumatic, vacuum and food applications
Connection 1	UN/UNF inner thread
Sealing form 1	for screw-in pins with shapes A, B and if necessary E
Connection 2	Plug in sleeve
Design	Screw-on connector
Colour	black
Media	Air fluid media inert gases, e.g., N2/CO2
Material	Acetal copolymer body; nitrile O-ring



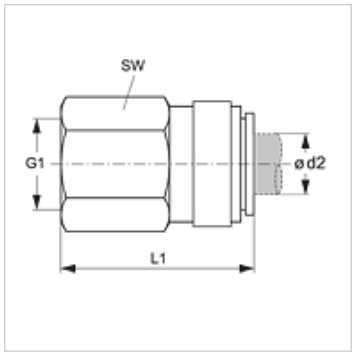

Item

Identification	Ø d2 (mm)	G1	L1 (mm)	AF (mm)
JG 45 08 F4S	8	7/16"-20 UNF	34,0	16
JG 45 08 C5S	8	1/2"-20 UNF	36,5	20

Accessories

JG 18 S	Locking ring for connectors
JG 19 E	Cap for connectors

Despite careful checking, we cannot guarantee the accuracy of all information included on this site, and we accept no liability.