SNK 45 KA M

Conical lubricating nipple, hexagonal head, angle 45°

Properties

Connection 1	metric conical outer thread
Sealing form 1	thread seal
Connection 2	Lubricating nipple
Design	Hydraulic-type lubricating nipple
Construction type	Angular design
Construction	Angle 45°
Standard	DIN 71412
Additional feature	Lubricating nipple head diameter 6,5 mm
Material	Steel
Surface	electro galvanised



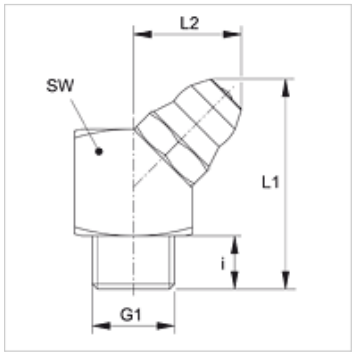

Item

Identification	G1	i (mm)	L1 (mm)	L2 (mm)	AF (mm)
SNK 45 KA M06-1.0	M 6 x 1 K	5,5	20,2	10,5	9
SNK 45 KA M08-1.0	M 8 x 1 K	5,5	20,2	10,5	9
SNK 45 KA M10-1.0	M 10 x 1 K	5,5	20,5	11,0	11

Despite careful checking, we cannot guarantee the accuracy of all information included on this site, and we accept no liability.