# SNK 45 KU M

Conical lubricating, ball, angle 45°

## Properties

| | |
|---|---|
| **Connection 1** | metric conical outer thread |
| **Sealing form 1** | thread seal |
| **Connection 2** | Lubricating nipple |
| **Design** | Hydraulic-type lubricating nipple |
| **Construction type** | Spherical design |
| **Construction** | Angle 45° |
| **Standard** | DIN 71412 |
| **Additional feature** | Lubricating nipple head diameter 6,5 mm |
| **Material** | Steel |
| **Surface** | electro galvanised |



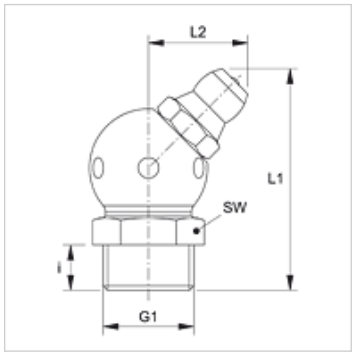


## Item

| Identification | G1 | i (mm) | L1 (mm) | L2 (mm) | AF (mm) |
|---|---|---|---|---|---|
| **SNK 45 KU M05-0.8** | M 5 x 0.8 K | 5,5 | 23,5 | 10,5 | 9 |
| **SNK 45 KU M06-1.0** | M 6 x 1 K | 5,5 | 23,5 | 10,5 | 9 |
| **SNK 45 KU M08-1.0** | M 8 x 1 K | 5,5 | 23,5 | 10,5 | 9 |
| **SNK 45 KU M10-1.0** | M 10 x 1 K | 5,5 | 25,0 | 11,5 | 11 |

## Product versions

| | |
|---|---|
| **SNK 45 KU M V2** | Conical lubricating, ball, angle 45°, stainless steel 1.4305 |

*Despite careful checking, we cannot guarantee the accuracy of all information included on this site, and we accept no liability.*