SNK 45 KU R

Conical lubricating, ball, angle 45°

HANSA-FLEX

Properties

Connection 1	BSPT conical external threads
Sealing form 1	thread seal
Connection 2	Lubricating nipple
Design	Hydraulic-type lubricating nipple
Construction type	Spherical design
Construction	Angle 45°
Standard	DIN 71412
Additional feature	Lubricating nipple head diameter 6,5 mm
Material	Steel
Surface	electro galvanised



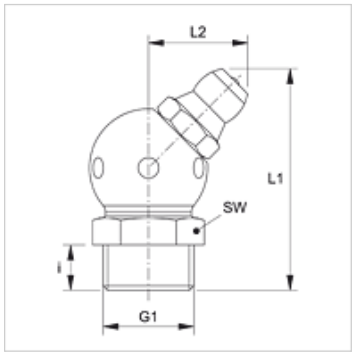

Item

Identification	G1	i (mm)	L1 (mm)	L2 (mm)	AF (mm)
SNK 45 KU R1/8	R 1/8" K	5,5	25,0	11,5	11
SNK 45 KU R1/4	R 1/4" K	6,5	22,5	12,0	14

Despite careful checking, we cannot guarantee the accuracy of all information included on this site, and we accept no liability.