SNK KK R

Conical lubricating nipple with plastic ball

HANSA-FLEX

Properties

Connection 1	BSPT conical external threads
Sealing form 1	thread seal
Connection 2	Lubricating nipple
Design	Hydraulic-type lubricating nipple
Construction type	with plastic ball
Construction	straight
Standard	DIN 71412
Additional feature	Lubricating nipple head diameter 6,5 mm
Material	Steel
Surface	electro galvanised



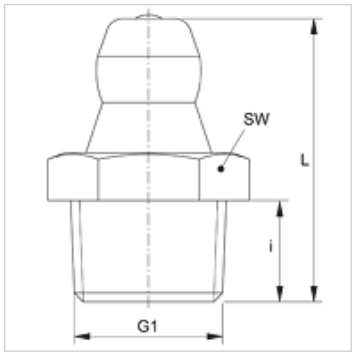

Item

Identification	G1	i (mm)	L (mm)	AF (mm)
SNK KK R1/4	R 1/4" K	6,5	17,5	14

Despite careful checking, we cannot guarantee the accuracy of all information included on this site, and we accept no liability.