SNK M MG

Hydraulic-type lubricating nipple

Properties

Connection 1	metric conical outer thread
Sealing form 1	thread seal
Connection 2	Lubricating nipple
Design	Hydraulic-type lubricating nipple
Construction	straight
Standard	DIN 71412
Additional feature	Lubricating nipple head diameter 6,5 mm
Material	Brass



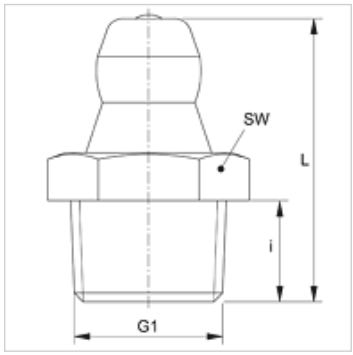

Item

Identification	G1	i (mm)	L (mm)	AF (mm)
SNK M08-1.00 MG	M 8 x 1 K	5,5	15,0	9
SNK M08-1.25 MG	M 8 x 1.25 K	5,5	15,0	9
SNK M10-1.00 MG	M 10 x 1 K	5,5	15,0	11
SNK M12-1.50 MG	M 12 x 1.5 K	6,5	17,5	14

Product versions

SNK M

SNK M V2

Despite careful checking, we cannot guarantee the accuracy of all information included on this site, and we accept no liability.