BK ALU GRIFF SW

Handle for ball valve

Properties

Construction	straight
Material	Aluminium
suitable for	Block ball valves



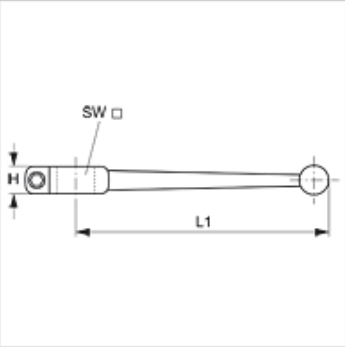

Item

Identification	H (mm)	L1 (mm)	AF (mm)
BK ALU GRIFF SW 9	11,0	150,0	9
BK ALU GRIFF SW 12	12,0	175,0	12
BK ALU GRIFF SW 14	12,0	200,0	14
BK ALU GRIFF SW 17	16,0	280,0	17
BK ALU GRIFF SW 19	-	300,0	19

Despite careful checking, we cannot guarantee the accuracy of all information included on this site, and we accept no liability.