SRS 1-6 AL

Pipe clamp, light series

HANSA-FLEX

Properties

Design	Single pipe clamp
Construction type	Inside of clamp with web
Series	light
Standard	DIN 3015-1
Temp. min.	-40 °C
Temp. max.	300 °C
Material	Aluminium



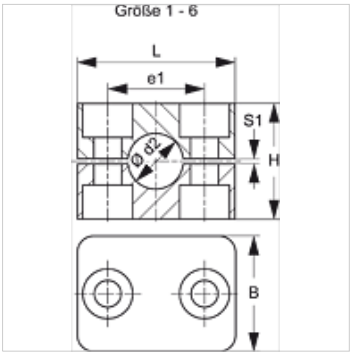

Description

Webs in the inner surface of the clamps dampen impacts and vibrations and absorb forces along the pipe axis.
A gap between the two halves pretensions the pipe.

Ordering information

1 piece = 2 halves of clamp

Item

Identification	External pipe Ø d2 (mm)	External pipe Ø d2	Clamp size	e1 (mm)	H (mm)	L (mm)	S1 (mm)
SRS 0106 AL	6,0	-	1	20	27	34	0,6
SRS 0106.4 AL	6,4	1/4"	1	20	27	34	0,6
SRS 0108 AL	8,0	5/16"	1	20	27	34	0,6
SRS 0109.5 AL	9,5	3/8"	1	20	27	34	0,6
SRS 0110 AL	10,0	-	1	20	27	34	0,6
SRS 0110.2 AL	10,2	1/8"	1	20	27	34	0,6
SRS 0112 AL	12,0	-	1	20	27	34	0,6
SRS 0212.7 AL	12,7	1/2"	2	26	33	40	0,8
SRS 0213.5 AL	13,5	-	2	26	33	40	0,8
SRS 0214 AL	14,0	-	2	26	33	40	0,8
SRS 0215 AL	15,0	-	2	26	33	40	0,8
SRS 0216 AL	16,0	5/8"	2	26	33	40	0,8
SRS 0217.2 AL	17,2	-	2	26	33	40	0,8
SRS 0218 AL	18,0	-	2	26	33	40	0,8
SRS 0319 AL	19,0	3/4"	3	33	35	48	1,0
SRS 0320 AL	20,0	-	3	33	35	48	1,0
SRS 0321.3 AL	21,3	-	3	33	35	48	1,0
SRS 0322 AL	22,0	-	3	33	35	48	1,0
SRS 0323 AL	23,0	-	3	33	35	48	1,0
SRS 0325 AL	25,0	1"	3	33	35	48	1,0
SRS 0426.9 AL	26,9	-	4	40	42	57	1,2
SRS 0428 AL	28,0	-	4	40	42	57	1,2
SRS 0430 AL	30,0	-	4	40	42	57	1,2
SRS 0532 AL	32,0	1.1/4"	5	52	58	70	1,2
SRS 0533.7 AL	33,7	-	5	52	58	70	1,2
SRS 0535 AL	35,0	-	5	52	58	70	1,2
SRS 0538 AL	38,0	1.1/2"	5	52	58	70	1,2
SRS 0540 AL	40,0	-	5	52	58	70	1,2
SRS 0542.4 AL	42,4	-	5	52	58	70	1,2
SRS 0542 AL	42,0	-	5	52	58	70	1,2
SRS 0644.5 AL	44,5	1.3/4"	6	66	66	86	1,2
SRS 0645 AL	45,0	-	6	66	66	86	1,2
SRS 0648 AL	48,0	-	6	66	66	86	1,2
SRS 0650 AL	50,0	-	6	66	66	86	1,2
SRS 0652 AL	52,0	-	6	66	66	86	1,2
SRS 0655 AL	55,0	-	6	66	66	86	1,2
SRS 0657 AL	57,0	2.1/4"	6	66	66	86	1,2

Product versions

SRS 1-6 PA	Pipe clamp, light series, Inside of clamp with web
SRS 1-6 PA G	Pipe clamp, light series, Inside of clamp, smooth

Despite careful checking, we cannot guarantee the accuracy of all information included on this site, and we accept no liability.

Despite careful checking, we cannot guarantee the accuracy of all information included on this site, and we accept no liability.