SRS 1-6 PA

Pipe clamp, light series

Properties

Construction type	Inside of clamp with web
Series	light
Standard	DIN 3015-1
Temp. min.	-40 °C
Temp. max.	120 °C
Material	Polyamide 6



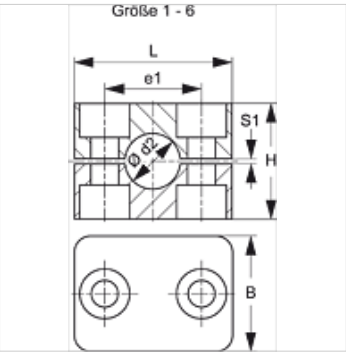

Note

The use of clamps with a smooth inner surface is recommended for retaining hoses and cables. No pretension is applied when fitting and the block height H is reduced to the gap width S1.

Description

Webs in the inner surface of the clamps dampen impacts and vibrations and absorb forces along the pipe axis.
A gap between the two halves pretensions the pipe.

Ordering information

1 piece = 2 halves of clamp

Item

Identification	External pipe Ø d2 (mm)	External pipe Ø d2	Clamp size	e1 (mm)	H (mm)	L (mm)	S1 (mm)
SRS 106 A PA	6,0	-	1	20	27	34	0,6
SRS 106.4 A PA	6,4	1/4"	1	20	27	34	0,6
SRS 108 A PA	8,0	5/16"	1	20	27	34	0,6
SRS 109.5 A PA	9,5	3/8"	1	20	27	34	0,6
SRS 110 A PA	10,0	-	1	20	27	34	0,6
SRS 112 A PA	12,0	-	1	20	27	34	0,6
SRS 0212.7 PA	12,7	1/2"	2	26	33	40	0,8
SRS 0213.5 PA	13,5	-	2	26	33	40	0,8
SRS 0214 PA	14,0	-	2	26	33	40	0,8
SRS 0215 PA	15,0	-	2	26	33	40	0,8
SRS 0216 PA	16,0	5/8"	2	26	33	40	0,8
SRS 0217.2 PA	17,2	-	2	26	33	40	0,8
SRS 0218 PA	18,0	-	2	26	33	40	0,8
SRS 0319 PA	19,0	3/4"	3	33	35	48	1,0
SRS 0320 PA	20,0	-	3	33	35	48	1,0
SRS 0321.3 PA	21,3	-	3	33	35	48	1,0
SRS 0322 PA	22,0	-	3	33	35	48	1,0
SRS 0325 PA	25,0	1"	3	33	35	48	1,0
SRS 0426.9 PA	26,9	-	4	40	42	57	1,2
SRS 0428 PA	28,0	-	4	40	42	57	1,2
SRS 0430 PA	30,0	-	4	40	42	57	1,2
SRS 0532 PA	32,0	1.1/4"	5	52	58	70	1,2
SRS 0533.7 PA	33,7	-	5	52	58	70	1,2
SRS 0535 PA	35,0	-	5	52	58	70	1,2
SRS 0538 PA	38,0	1.1/2"	5	52	58	70	1,2
SRS 0540 PA	40,0	-	5	52	58	70	1,2
SRS 0542 PA	42,0	-	5	52	58	70	1,2
SRS 0644.5 PA	44,5	1.3/4"	6	66	66	86	1,2
SRS 0645 PA	45,0	-	6	66	66	86	1,2
SRS 0648 PA	48,0	-	6	66	66	86	1,2
SRS 0650 PA	50,0	-	6	66	66	86	1,2
SRS 0650.8 PA	50,8	2"	6	66	66	86	1,2
SRS 0652 PA	52,0	-	6	66	66	86	1,2
SRS 0655 PA	55,0	-	6	66	66	86	1,2
SRS 0657 PA	57,0	2.1/4"	6	66	66	86	1,2

Despite careful checking, we cannot guarantee the accuracy of all information included on this site, and we accept no liability.

Product versions

SRS 1-6 PA G	Pipe clamp, light series, Inside of clamp, smooth
SRS 1-6 PP	Pipe clamp, light series, Inside of clamp with web
SRS 1-6 PP G	Pipe clamp, light series, Inside of clamp, smooth
SRS 1-6 VG	Pipe clamp, light series, Inside of clamp, smooth
SRS 1-6 AL	Pipe clamp, light series, Inside of clamp with web

Despite careful checking, we cannot guarantee the accuracy of all information included on this site, and we accept no liability.