SRS 30-100 PA

Pipe clamp, heavy series

HANSA-FLEX

Properties

Design	Single pipe clamp
Construction type	Inside of clamp with web
Series	heavy
Standard	DIN 3015-2
Temp. min.	-40 °C
Temp. max.	120 °C
Material	Polyamide 6



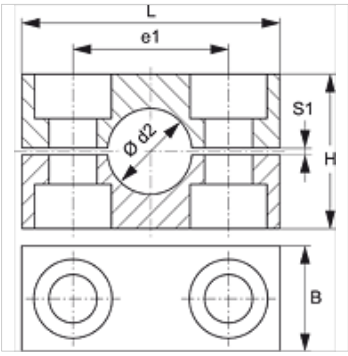

Description

Webs in the inner surface of the clamps dampen impacts and vibrations and absorb forces along the pipe axis.
A gap between the two halves pretensions the pipe.

Ordering information

1 piece = 2 halves of clamp

Item

Identification	Clamp size	External pipe Ø d2 (mm)	External pipe Ø d2	B (mm)	e1 (mm)	H (mm)	L (mm)	S1 (mm)
SRS 3006 PA	1	6,0	-	30	33	32	56	2
SRS 3008 PA	1	8,0	5/16"	30	33	32	56	2
SRS 3010 PA	1	10,0	-	30	33	32	56	2
SRS 3012 PA	1	12,0	-	30	33	32	56	2
SRS 3012.7 PA	1	12,7	1/2"	30	33	32	56	2
SRS 3013.5 PA	1	13,5	-	30	33	32	56	2
SRS 3014 PA	1	14,0	-	30	33	32	56	2
SRS 3015 PA	1	15,0	-	30	33	32	56	2
SRS 3016 PA	1	16,0	5/8"	30	33	32	56	2
SRS 3017.2 PA	1	17,2	-	30	33	32	56	2
SRS 3018 PA	1	18,0	-	30	33	32	56	2
SRS 4019 PA	2	19,0	3/4"	30	45	48	71	2
SRS 4020 PA	2	20,0	-	30	45	48	71	2
SRS 4021.3 PA	2	21,3	-	30	45	48	71	2
SRS 4022 PA	2	22,0	-	30	45	48	71	2
SRS 4023 PA	2	23,0	-	30	45	48	71	2
SRS 4025 PA	2	25,0	1"	30	45	48	71	2
SRS 4026.9 PA	2	26,9	-	30	45	48	71	2
SRS 4028 PA	2	28,0	-	30	45	48	71	2
SRS 4030 PA	2	30,0	-	30	45	48	71	2
SRS 5030 PA	3	30,0	-	30	60	60	86	2
SRS 5032 PA	3	32,0	1.1/4"	30	60	60	86	2
SRS 5033.7 PA	3	33,7	-	30	60	60	86	2
SRS 5035 PA	3	35,0	-	30	60	60	86	2
SRS 5038 PA	3	38,0	1.1/2"	30	60	60	86	2
SRS 5040 PA	3	40,0	-	30	60	60	86	2
SRS 5042 PA	3	42,0	-	30	60	60	86	2
SRS 6038 PA	4	38,0	1.1/2"	45	90	90	117	3
SRS 6040 PA	4	40,0	-	45	90	90	117	3
SRS 6042 PA	4	42,0	-	45	90	90	117	3
SRS 6045 PA	4	45,0	-	45	90	90	117	3
SRS 6048.3 PA	4	48,3	-	45	90	90	117	3
SRS 6050 PA	4	50,0	-	45	90	90	117	3
SRS 6051 PA	4	51,0	2"	45	90	90	117	3
SRS 6052 PA	4	52,0	-	45	90	90	117	3
SRS 6055 PA	4	55,0	-	45	90	90	117	3
SRS 6057 PA	4	57,0	2.1/4"	45	90	90	117	3
SRS 6060.3 PA	4	60,3	-	45	90	90	117	3
SRS 6063 PA	4	63,0	2.1/2"	45	90	90	117	3
SRS 6065 PA	4	65,0	-	45	90	90	117	3
SRS 6070 PA	4	70,0	-	45	90	90	117	3

Despite careful checking, we cannot guarantee the accuracy of all information included on this site, and we accept no liability.

SRS 30-100 PA

Pipe clamp, heavy series

HANSA-FLEX

Item

Identification	Clamp size	External pipe Ø d2 (mm)	External pipe Ø d2	B (mm)	e1 (mm)	H (mm)	L (mm)	S1 (mm)
SRS 7070 PA	5	70,0	-	60	122	120	154	5
SRS 7073 PA	5	73,0	-	60	122	120	154	5
SRS 7075 PA	5	75,0	-	60	122	120	154	5
SRS 7076.1 PA	5	76,1	3"	60	122	120	154	5
SRS 7080 PA	5	80,0	-	60	122	120	154	5
SRS 7082.5 PA	5	82,5	3.1/4"	60	122	120	154	5
SRS 7088.9 PA	5	88,9	3.1/2"	60	122	120	154	5
SRS 7090 PA	5	90,0	-	60	122	120	154	5
SRS 8090 PA	6	90,0	-	80	168	170	205	6
SRS 8097 PA	6	97,0	-	80	168	170	205	6
SRS 8100 PA	6	100,0	-	80	168	170	205	6
SRS 8101.6 PA	6	101,6	4"	80	168	170	205	6
SRS 8108 PA	6	108,0	4.1/4"	80	168	170	205	6
SRS 8114.3 PA	6	114,3	4.1/2"	80	168	170	205	6
SRS 8127 PA	6	127,0	5"	80	168	170	205	6
SRS 9127 PA	7	127,0	5"	90	205	200	250	6
SRS 9133 PA	7	133,0	5.1/4"	90	205	200	250	6
SRS 9140 PA	7	140,0	5.1/2"	90	205	200	250	6
SRS 9150 PA	7	150,0	-	90	205	200	250	6
SRS 9152.4 PA	7	152,4	6"	90	205	200	250	6
SRS 9159 PA	7	159,0	6.1/4"	90	205	200	250	6
SRS 9165.1 PA	7	165,1	6.1/2"	90	205	200	250	6
SRS 9168.3 PA	7	168,3	6.5/8"	90	205	200	250	6
SRS 10168.3 PA	8	168,3	6.5/8"	120	265	270	320	6
SRS 10177.8 PA	8	177,8	7"	120	265	270	320	6
SRS 10193.7 PA	8	193,7	7.5/8"	120	265	270	320	6
SRS 10203 PA	8	203,0	-	120	265	270	320	6
SRS 10219.1 PA	8	219,1	8.5/8"	120	265	270	320	6
SRS 10220 PA	8	220,0	-	120	265	270	320	6

Product versions

SRS 30-100 AL	Pipe clamp, heavy series, Inside of clamp with web
SRS 30-100 PP	Pipe clamp, heavy series, Inside of clamp with web
SRS 30-100 PP G	Pipe clamp, heavy series, Inside of clamp, smooth
SRS 30-100 VG	Pipe clamp, heavy series, Inside of clamp with web

Despite careful checking, we cannot guarantee the accuracy of all information included on this site, and we accept no liability.