SRS 30-100 PP G

Pipe clamp, heavy series

HANSA-FLEX

Properties

Design	Single pipe clamp
Construction type	Inside of clamp, smooth
Series	heavy
Standard	DIN 3015-2
Temp. min.	-30 °C
Temp. max.	90 °C
Material	Polypropylene



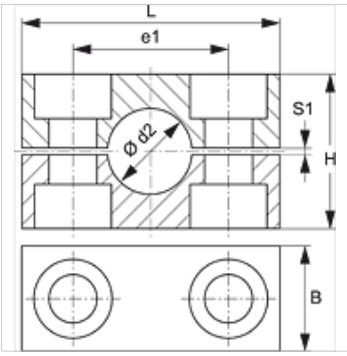

Note

The use of clamps with a smooth inner surface is recommended for retaining hoses and cables. No pretension is applied when fitting and the block height H is reduced to the gap width S1.

Ordering information

1 piece = 2 halves of clamp

Item

Identification	Clamp size	External pipe Ø d2 (mm)	External pipe Ø d2	B (mm)	e1 (mm)	H (mm)	L (mm)	S1 (mm)
SRS 3006 PP G	1	6,0	-	30	33	32	56	2
SRS 3008 PP G	1	8,0	5/16"	30	33	32	56	2
SRS 3010 PP G	1	10,0	-	30	33	32	56	2
SRS 3012 PP G	1	12,0	-	30	33	32	56	2
SRS 3012.7 PP G	1	12,7	1/2"	30	33	32	56	2
SRS 3013.5 PP G	1	13,5	-	30	33	32	56	2
SRS 3014 PP G	1	14,0	-	30	33	32	56	2
SRS 3015 PP G	1	15,0	-	30	33	32	56	2
SRS 3016 PP G	1	16,0	5/8"	30	33	32	56	2
SRS 3017.2 PP G	1	17,2	-	30	33	32	56	2
SRS 3018 PP G	1	18,0	-	30	33	32	56	2
SRS 4019 PP G	2	19,0	3/4"	30	45	48	71	2
SRS 4020 PP G	2	20,0	-	30	45	48	71	2
SRS 4021.3 PP G	2	21,3	-	30	45	48	71	2
SRS 4022 PP G	2	22,0	-	30	45	48	71	2
SRS 4023 PP G	2	23,0	-	30	45	48	71	2
SRS 4025 PP G	2	25,0	1"	30	45	48	71	2
SRS 4026.9 PP G	2	26,9	-	30	45	48	71	2
SRS 4028 PP G	2	28,0	-	30	45	48	71	2
SRS 4030 PP G	2	30,0	-	30	45	48	71	2
SRS 5030 PP G	3	30,0	-	30	60	60	86	2
SRS 5032 PP G	3	32,0	1.1/4"	30	60	60	86	2
SRS 5033.7 PP G	3	33,7	-	30	60	60	86	2
SRS 5035 PP G	3	35,0	-	30	60	60	86	2
SRS 5038 PP G	3	38,0	1.1/2"	30	60	60	86	2
SRS 5040 PP G	3	40,0	-	30	60	60	86	2
SRS 5042 PP G	3	42,0	-	30	60	60	86	2
SRS 6038 PP G	4	38,0	1.1/2"	45	90	90	117	3
SRS 6040 PP G	4	40,0	-	45	90	90	117	3
SRS 6042 PP G	4	42,0	-	45	90	90	117	3
SRS 6045 PP G	4	45,0	-	45	90	90	117	3
SRS 6048.3 PP G	4	48,3	-	45	90	90	117	3
SRS 6050 PP G	4	50,0	-	45	90	90	117	3
SRS 6051 PP G	4	51,0	2"	45	90	90	117	3
SRS 6052 PP G	4	52,0	-	45	90	90	117	3
SRS 6055 PP G	4	55,0	-	45	90	90	117	3
SRS 6057 PP G	4	57,0	2.1/4"	45	90	90	117	3
SRS 6060.3 PP G	4	60,3	-	45	90	90	117	3
SRS 6063 PP G	4	63,0	2.1/2"	45	90	90	117	3
SRS 6065 PP G	4	65,0	-	45	90	90	117	3
SRS 6070 PP G	4	70,0	-	45	90	90	117	3

Despite careful checking, we cannot guarantee the accuracy of all information included on this site, and we accept no liability.

Product versions

SRS 30-100 AL	Pipe clamp, heavy series, Inside of clamp with web
SRS 30-100 PA	Pipe clamp, heavy series, Inside of clamp with web
SRS 30-100 PP	Pipe clamp, heavy series, Inside of clamp with web
SRS 30-100 VG	Pipe clamp, heavy series, Inside of clamp with web

Despite careful checking, we cannot guarantee the accuracy of all information included on this site, and we accept no liability.