K 405-55 - K 405-60

Reducing adapter, long

HANSA-FLEX

Properties

Connection 1	metric cylindrical outer thread
Connection 2	BSP cylindrical internal threads
Design	Reducing adapters
Construction type	Long
Material	Steel
Surface	electro galvanised



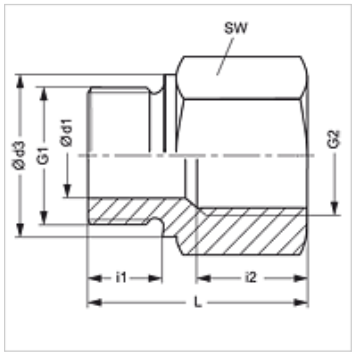

Item

Identification	G1	G2	i (mm)	L1 (mm)	AF (mm)
K 405-55	M 14 x 1.5	G 1/4" -19	12	34	19
K 405-58	M 22 x 1.5	G 3/8" -19	12	32	27
K 405-60	M 22 x 1.5	G 1/2" -14	12	35	27

AF = Width across flats

Despite careful checking, we cannot guarantee the accuracy of all information included on this site, and we accept no liability.