K 407-1-1
Reinforcing sleeve



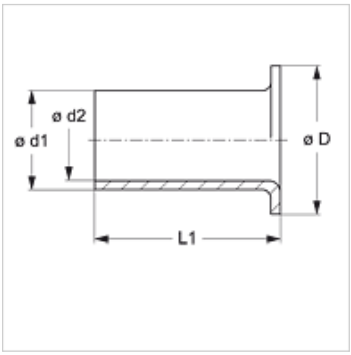

Item

Identification	D (mm)	Ø d1 (mm)	Ø d2 (mm)	L1 (mm)
K 407-1-1	3,8	3	1,7	8

Despite careful checking, we cannot guarantee the accuracy of all information included on this site, and we accept no liability.