K 420-03 - K 420-84

Screw-in sockets

HANSA-FLEX

Properties

Connection 1	metric conical outer thread
Sealing form 1	24° inner cone
Connection 2	metric cylindrical outer thread
Sealing form 2	Shape A
Design	Screw-in sockets
Construction	straight
Standard	DIN 3852
Material	Steel
Surface	electro galvanised



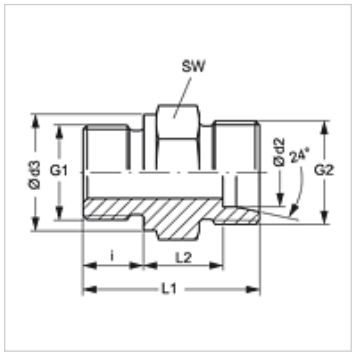

Item

Identification	Ø d2 (mm)	Ø d3 (mm)	G1	G2	i (mm)	L1 (mm)	L2 (mm)	AF (mm)
K 420-03	8	17	M 12 x 1.5	M 14 x 1.5	12	29,0	10,0	17
K 420-04	10	17	M 12 x 1.5	M 16 x 1.5	12	30,0	11,0	17
K 420-05	8	19	M 14 x 1.5	M 14 x 1.5	12	29,0	10,0	19
K 420-06	10	19	M 14 x 1.5	M 16 x 1.5	12	30,0	11,0	19
K 420-18	8	23	M 18 x 1.5	M 14 x 1.5	12	30,5	11,0	24
K 420-25	10	21	M 16 x 1.5	M 16 x 1.5	12	31,5	12,5	22
K 420-26	6	17	M 12 x 1.5	M 12 x 1.5	12	29,0	10,0	17
K 420-27	6	19	M 14 x 1.5	M 12 x 1.5	12	29,0	10,0	19
K 420-37	10	23	M 18 x 1.5	M 16 x 1.5	12	31,5	12,5	24
K 420-39	18	27	M 22 x 1.5	M 26 x 1.5	14	36,0	14,5	27
K 420-44	15	21	M 16 x 1.5	M 22 x 1.5	12	32,5	13,5	24
K 420-45	15	23	M 18 x 1.5	M 22 x 1.5	12	32,5	13,5	24
K 420-47	15	27	M 22 x 1.5	M 22 x 1.5	14	36,0	15,0	27
K 420-57	6	21	M 16 x 1.5	M 12 x 1.5	12	30,5	11,5	22
K 420-82	12	21	M 16 x 1.5	M 18 x 1.5	12	31,5	12,5	22
K 420-84	12	23	M 18 x 1.5	M 18 x 1.5	12	31,5	12,5	24

Ø d2 = External pipe diameter – AF = Width across flats

Product versions

K 42-02 - K 42-106	Screw in fitting, with union nut and cutting ring

Despite careful checking, we cannot guarantee the accuracy of all information included on this site, and we accept no liability.