UEM FM
Union function nut

Properties

Connection 1	metric nut thread
Design	Union function nut
Scope of supply	Union nut, cutting ring, soft seal
Material	Steel
Surface	electro galvanised

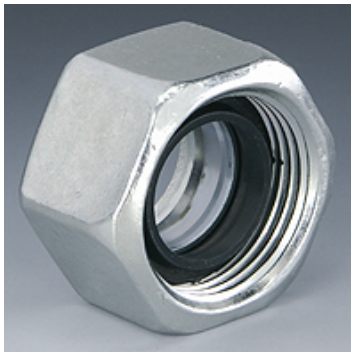

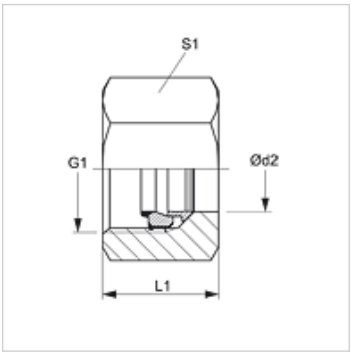

Note

Information about fitting, installation, pressure loads and permissible operating temperatures can be found in the technical information for pipe fittings.

Item

Identification	Series	Operating pressure	Ø d2 (mm)	G1	L1 (mm)	S1
UEM 04 FM LL	LL	PN 100	4	M 8 x 1	11,0	10
UEM 06 FM LL	LL	PN 100	6	M 10 x 1	11,5	12
UEM NW 04 FM L	L	PN 315	6	M 12 x 1.5	14,5	14
UEM NW 06 FM L	L	PN 315	8	M 14 x 1.5	14,5	17
UEM NW 08 FM L	L	PN 315	10	M 16 x 1.5	15,5	19
UEM NW 10 FM L	L	PN 315	12	M 18 x 1.5	15,5	22
UEM NW 13 FM L	L	PN 315	15	M 22 x 1.5	17,0	27
UEM NW 16 FM L	L	PN 315	18	M 26 x 1.5	18,0	32
UEM NW 20 FM L	L	PN 160	22	M 30 x 2	20,0	36
UEM NW 25 FM L	L	PN 160	28	M 36 x 2	21,0	41
UEM NW 32 FM L	L	PN 160	35	M 45 x 2	24,0	50
UEM NW 40 FM L	L	PN 160	42	M 52 x 2	24,0	60
UEM NW 03 FM S	S	PN 630	6	M 14 x 1.5	16,5	17
UEM NW 04 FM S	S	PN 630	8	M 16 x 1.5	16,5	19
UEM NW 06 FM S	S	PN 630	10	M 18 x 1.5	17,5	22
UEM NW 08 FM S	S	PN 630	12	M 20 x 1.5	17,5	24
UEM NW 10 FM S	S	PN 630	14	M 22 x 1.5	20,5	27
UEM NW 13 FM S	S	PN 400	16	M 24 x 1.5	20,5	30
UEM NW 16 FM S	S	PN 400	20	M 30 x 2	24,0	36
UEM NW 20 FM S	S	PN 400	25	M 36 x 2	27,0	46
UEM NW 25 FM S	S	PN 400	30	M 42 x 2	29,0	50
UEM NW 32 FM S	S	PN 315	38	M 52 x 2	32,5	60

Series: LL = Very light L = Light S = Heavy – Ø d2 = External pipe diameter

Despite careful checking, we cannot guarantee the accuracy of all information included on this site, and we accept no liability.